CUI Devices is now Same Sky! Learn More

SERIES: CBM-120B | DESCRIPTION: DC BLOWER

FEATURES

- ball bearing design
- multiple speed options for different cooling needs
- 120 x 120 mm frame
- auto restart protection standard on all models



MODEL

	input voltage		input current[1]	input power[1]	rated speed[1]	air flow[2]	static pressure[3]	noise[4]
	rated (Vdc)	range (Vdc)	max (mA)	max (W)	typ (RPM±10%)	(CFM)	(inch H_2O)	max (dBA)
CBM-A232B-121	12	6~13.8	450	5.4	2100	31.4	0.64	49.6
CBM-A232B-125	12	6~13.8	820	9.8	2500	35.9	0.89	53.8

Notes:
1. At rated voltage, 25°C, 0 inch H_2O static pressure, after 10 minutes
2. As per AMCA 210 or DIN 24163, at rated voltage, stabilized RPM, 0 inch H_2O static pressure
3. As per AMCA 210 or DIN 24163, at rated voltage, stabilized RPM, 0 CFM airflow.
4. Measured in a semi-anechoic chamber with background noise < 15 dBA at 1 m from the fan intake.
5. All specifications are measured at 25°C, 65% relative humidity unless otherwise specified.

INPUT

parameter	conditions/description	min	typ	max	units
operating input voltage		6	12	13.8	Vdc
starting voltage			6		Vdc

PERFORMANCE[1]

parameter	conditions/description	min	typ	max	units
rated speed	at rated voltage, 25°C, after 10 minutes	2100		2500	RPM
air flow	at 0 inch H_2O, see performance curves	31.4		35.9	CFM
static pressure	at 0 CFM, see performance curves	0.64		0.89	inch H_2O
noise	at 1 m	49.6		53.8	dBA

Note: 1. See Model section on page 1 for specific values.

PROTECTIONS

parameter	conditions/description	min	typ	max	units
auto restart	when the fan motor is locked by an external force, the device will temporarily turn off electrical power to the motor and restart automatically when the locked rotor condition is released				

SAFETY & COMPLIANCE

parameter	conditions/description	min	typ	max	units
insulation resistance of frame	at 500 Vdc between internal stator and positive lead wire	10			MΩ
dielectric strength	apply 500 Vac for 1 minute between housing and positive lead wire				
safety approvals	UL/cUL 507, TUV (EN 60950-1)				
EMI/EMC	EN 61000-6-1:2007, EN 61000-6-3:2007+A1				
life expectancy	at 40°C, 65% RH		70,000		hours
RoHS	yes				

ENVIRONMENTAL

parameter	conditions/description	min	typ	max	units
operating temperature		-10		70	°C
storage temperature		-40		70	°C

PERFORMANCE CURVES

CBM-A232B-121

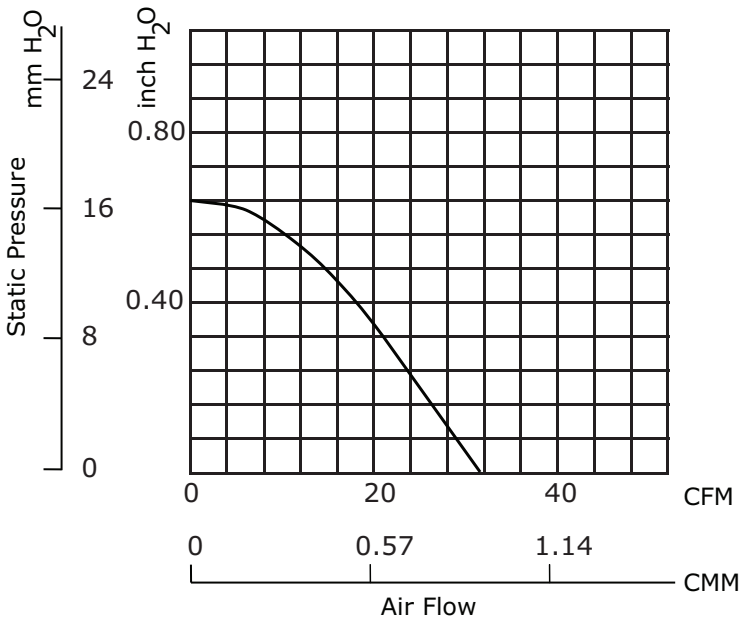

CBM-A232B-125

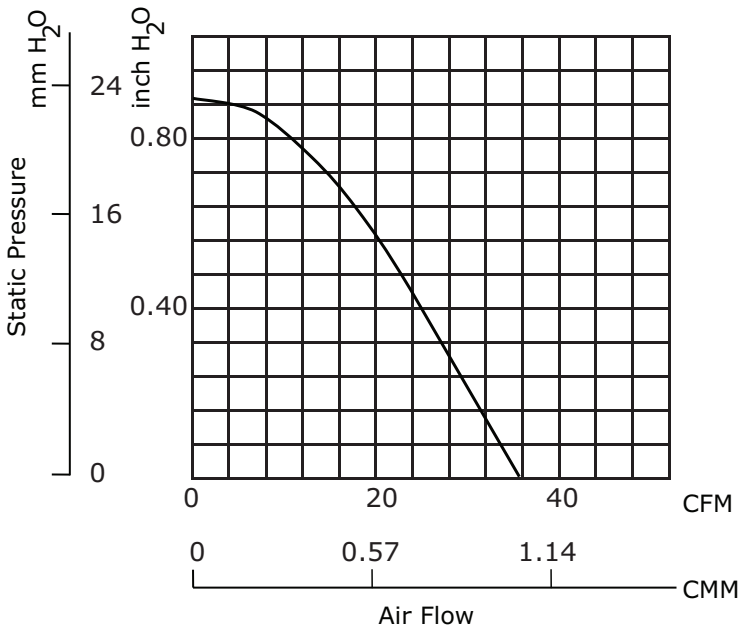

MECHANICAL

parameter	conditions/description	min	typ	max	units
motor	4 pole DC brushless				
bearing system	ball bearing				
direction of rotation	counter-clockwise viewed from front of fan blade				
dimensions	120 X 120 X 32				mm
material	PBT (UL94V-0)				
weight			250		g

MECHANICAL DRAWING

units: mm

wire: UL 1007, 24 AWG

WIRE CONNECTIONS	
Wire Color	Function
Red	+Vin
Black	-Vin

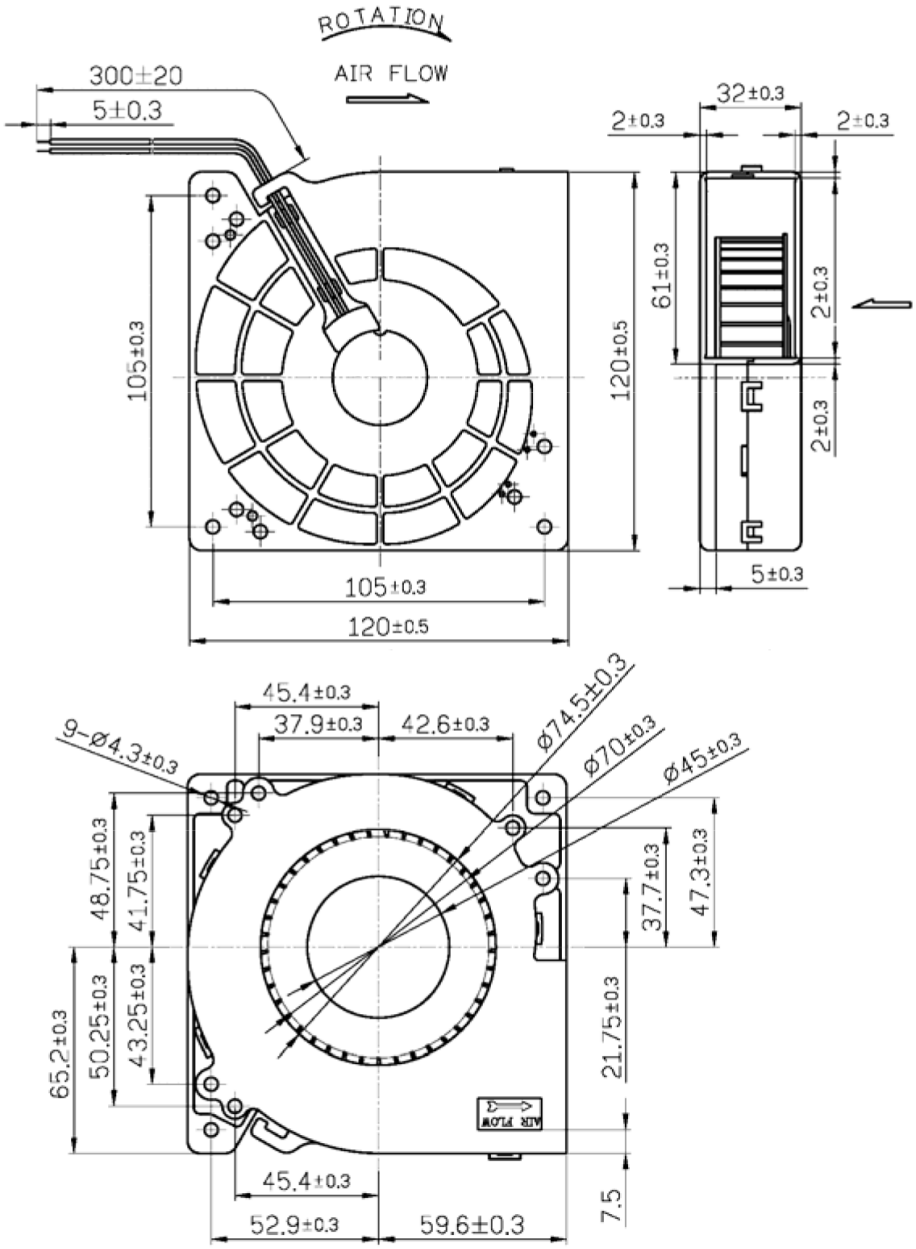

SAFETY CONSIDERATIONS

1. Do not use or operate this fan in excess of the limitations set forth in this specification. Same Sky is not responsible for the non-performance of this fan and/or any damages resulting from its use, if it is not used or operated in accordance with the specifications.
2. Same Sky recommends adding a protection circuit to the product or application in which this fan is installed, such as a thermo-fuse, or current fuse or thermo-protector. The failure to use such a device may result in smoke, fire, electric shock by insulation degradation in cases of motor lead short circuit, overload, or over voltage, and/or other failure.
3. Same Sky recommends installing a protection device to the product or application in which this fan is installed if there is a possibility of reverse connection between Vdc (+) and GND (-). The failue to install such a device may result in smoke, fire, and/or destruction, although these conditions may not manifest immediately.
4. This fan mush be installed and used in compliance with all applicable safety standards and regulations.
5. Use proper care when handling and/or installing this fan. Improper handling of installation of this fan may cause damage that could result in unsafe conditions.
6. Use proper care during installation and/or wiring. Failure to use proper care may cause damage to certain components of the fan including, but not limited to, the coil and lead wires, which could result in smoke and/or fire.
7. Do not use power or ground PWM to control the fan speed. If the fan speed needs to be adjusted, please contact Same Sky to customize the product design for your application.
8. For critical or extreme environments, including non-stop operation, please contact Same Sky and we will gladly provide assistance with your product selection to ensure an appropriate cooling product for your application.
9. When building your device, please examine thouroughly any variation of EMC, temperature rise, life data, quality, etc. of this product by shock/drop/vibration testing, etc. If there are any problems or accidents in connection with this product, it should be mutually discussed and examined.
10. Use proper care when handling these fans. Components such as fan holders or bearings may be damaged, if touched with fingers or other objects. Additionally, static electricity (ESD) may damage internal circuits of the fan.
11. Do not operate these fans in proximity to hazardous materials such as organic silicon, cyanogens, formalin, phenol, or corrosive gas environments including, but not limited to, H_2S, SO_2, NO_2, or Cl_2.
12. Same Sky recommends that you protect these fans from exposure to outside elements such as dust, condensation, humidity, or insects. Exposure of this fan to such elements may affect its performance and my cause safety hazards. Same Sky does not warrant against damage to the product caused by outside elements.
13. The fans must be installed properly and securely. Improper mounting may cause harsh resonance, vibration, and noise.
14. Do not store these fans in an environment with high humidity. These fans must be stored in accordance with the specified storage temperature.
15. Same Sky reserves the right to use components from multiple sources at its discretion. The use of components from other sources will not affect the specifications as described herein.
16. The life expectancy of these fans has not been evaluated for use in combination with any end application. Therefore, the life expectancy that relate to these fans are only for reference.

REVISION HISTORY

rev.	description	date
1.0	initial release	08/09/2017
1.01	brand update	02/07/2020
1.02	logo, datasheet style update	08/12/2022
1.03	CUI Devices rebranded to Same Sky	09/12/2024

The revision history provided is for informational purposes only and is believed to be accurate.

Same Sky offers a one (1) year limited warranty. Complete warranty information is listed on our website.

Same Sky reserves the right to make changes to the product at any time without notice. Information provided by Same Sky is believed to be accurate and reliable. However, no responsibility is assumed by Same Sky for its use, nor for any infringements of patents or other rights of third parties which may result from its use.

Same Sky products are not authorized or warranted for use as critical components in equipment that requires an extremely high level of reliability. A critical component is any component of a life support device or system whose failure to perform can be reasonably expected to cause the failure of the life support device or system, or to affect its safety or effectiveness.