CUI Devices is now Same Sky! Learn More



# SERIES: CAF-A2B | DESCRIPTION: AC AXIAL FAN

## FEATURES

- dual ball bearing
- 120 x 120 mm frame
- 110~125 or 220~240 Vac
- multiple speed options




| MODEL | input voltage rated (50/60 Hz) (Vac) | input current[1] max (50/60 Hz) (A) | input power[1] (50/60 Hz) (W±2) | rated speed[1] typ (50/60 Hz) (RPM±10%) | airflow[2] (50/60 Hz) (CFM) | static pressure[3] (50/60 Hz) (inch $H_2O$) | noise[4] typ (50/60 Hz) (dBA) |
|---|---|---|---|---|---|---|---|
| CAF-A225B-118-300 | 110 | 0.16/0.15 | 12.7/10.8 | 1,800[5]/1,700[5] | 44.69/45.50 | 0.08/0.08 | 32.6/35.2 |
| CAF-A225B-120-350 | 110 | 0.19/0.17 | 14.2/10.8 | 2,000[6]/2,000[6] | 51.94/53.87 | 0.11/0.10 | 36.4/37.3 |
| CAF-A225B-218-300 | 220 | 0.09/0.08 | 12.3/9.7 | 1,800[5]/1,700[5] | 44.69/45.50 | 0.08/0.08 | 32.4/32.8 |
| CAF-A225B-220-350 | 220 | 0.12/0.10 | 15.7/11.5 | 2,000[6]/2,000[6] | 51.94/53.87 | 0.11/0.10 | 36.4/37.3 |
| CAF-A238B-120-300 | 110 | 0.17/0.15 | 7.1/7.1 | 2,200[5]/1,800[5] | 68.20/52.41 | 0.15/0.08 | 30.0/29.0 |
| CAF-A238B-124-370 | 110 | 0.15/0.14 | 9.3/8.2 | 2,400[5]/2,100[5] | 72.07/63.52 | 0.19/0.10 | 37.7/35.6 |
| CAF-A238B-126-400 | 110 | 0.30/0.25 | 19.8/17.1 | 2,600/3,000 | 91.00/113.00 | 0.26/0.30 | 39.5/42.6 |
| CAF-A238B-220-300 | 220 | 0.08/0.07 | 7.1/7.1 | 2,200[5]/1,800[5] | 68.20/52.41 | 0.15/0.08 | 36.2/29.9 |
| CAF-A238B-224-370 | 220 | 0.11/0.10 | 11.2/9.7 | 2,400[5]/2,400[5] | 71.38/73.30 | 0.20/0.14 | 37.7/37.7 |
| CAF-A238B-226-400 | 220 | 0.13/0.12 | 16.0/12.7 | 2,600/3,000 | 91.00/113.00 | 0.26/0.30 | 41.0/44.3 |

Notes:
1. At rated voltage, will reach bottom line of specifications after 5 minutes. Will reach standard specification after 10 minutes continuously running.
2. At rated voltage, room temperature, 65% humidity, 0 inch $H_2O$ static pressure.
3. At rated voltage, 0 CFM airflow.
4. Measured in an anechoic chamber as per ISO3745/GB4214-84 at rated voltage, with background noise 10±2 dBA at 1 m from the fan intake.
5. Typical rated speed is measured as RPM±250 at rated voltage.
6. Typical rated speed is measured as RPM±300 at rated voltage.
7. All specifications are measured at 25°C, 65% relative humidity unless otherwise specified.

## INPUT

| parameter | conditions/description | min | typ | max | units |
|---|---|---|---|---|---|
| operating input voltage | 110 Vac input models<br>220 Vac input models | 100<br>220 | 110 | 125<br>240 | Vac<br>Vac |
| starting voltage | CAF-A225B-120-350, CAF-A238B-126-400 models<br>all other 110 Vac input models<br>220 Vac input models | | 85<br>90<br>175 | | Vac<br>Vac<br>Vac |
| locked current | CAF-A225B-118-300 (50/60 Hz)<br>CAF-A225B-120-350 (50/60 Hz)<br>CAF-A225B-218-300 (50/60 Hz)<br>CAF-A225B-220-350 (50/60 Hz)<br>CAF-A238B-120-300 (50/60 Hz)<br>CAF-A238B-124-370 (50/60 Hz)<br>CAF-A238B-126-400 (50/60 Hz)<br>CAF-A238B-220-300 (50/60 Hz)<br>CAF-A238B-224-370 (50/60 Hz)<br>CAF-A238B-226-400 (50/60 Hz) | | 0.14/0.13<br>0.17/0.15<br>0.07/0.07<br>0.10/0.08<br>0.17/0.15<br>0.15/0.14<br>0.30/0.27<br>0.06/0.05<br>0.10/0.08<br>0.12/0.10 | | A<br>A<br>A<br>A<br>A<br>A<br>A<br>A<br>A<br>A |

## PROTECTIONS / FEATURES

| parameter | conditions/description | min | typ | max | units |
|---|---|---|---|---|---|
| impedance protected motor | on all models | | | | |
| insulated type | Class B (130 °C) | | | | |

## SAFETY & COMPLIANCE

| parameter | conditions/description | min | typ | max | units |
|---|---|---|---|---|---|
| insulation resistance | at 500 Vdc between frame and both lead wires | 10 | | | MΩ |
| dielectric strength | for 1 minute at 1 mA between frame and lead wires | | 1500 | | Vac |
| safety approvals | UL/cUL 507, TUV (EN 60335-1:2012+A11+A13+A1+A14+A2+A15, EN 60335-2-80:2003+A1+A2, EN 62233:200*) | | | | |
| EMI/EMC | EN 55014-1:2017+A11, EN/IEC 61000-3-2:2019, EN 61000-3-3:2013+A1, EN 55014-2:2015 | | | | |
| life expectancy | at 25°C, 65% RH, 90% confidence level | | 70,000 | | hours |
| RoHS | yes | | | | |

## ENVIRONMENTAL

| parameter | conditions/description | min | typ | max | units |
|---|---|---|---|---|---|
| operating temperature | | -10 | | 70 | °C |
| storage temperature | | -40 | | 80 | °C |

# PERFORMANCE CURVES

## CAF-A225B-118-300

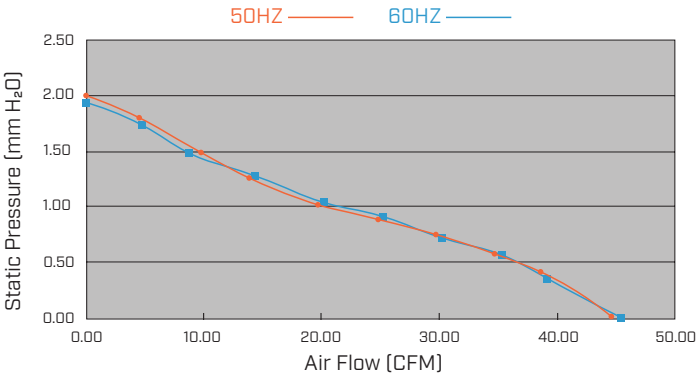


## CAF-A225B-120-350

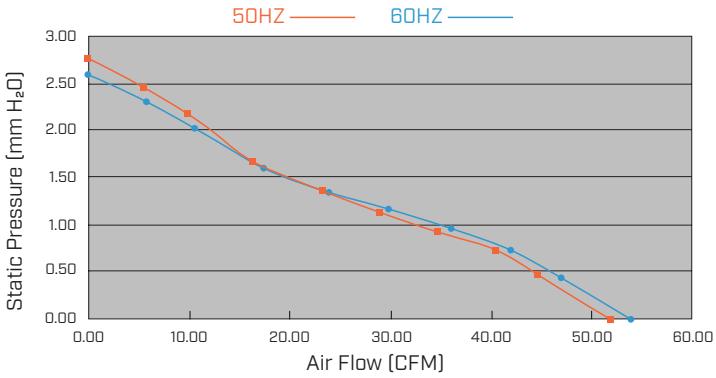


## CAF-A225B-218-300

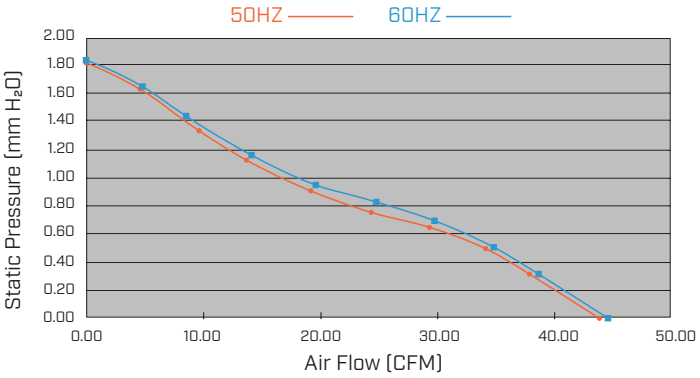


## CAF-A225B-220-350

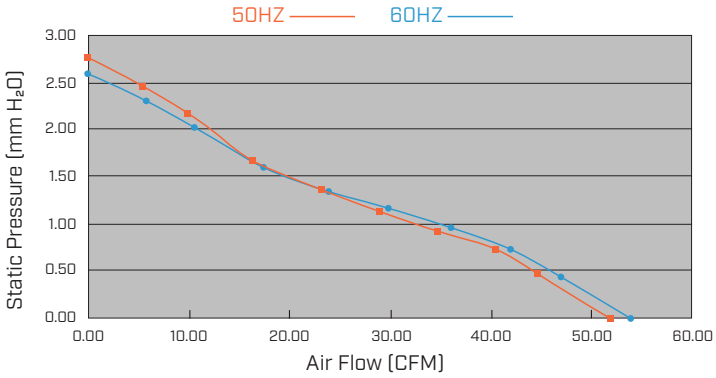


## CAF-A238B-120-300

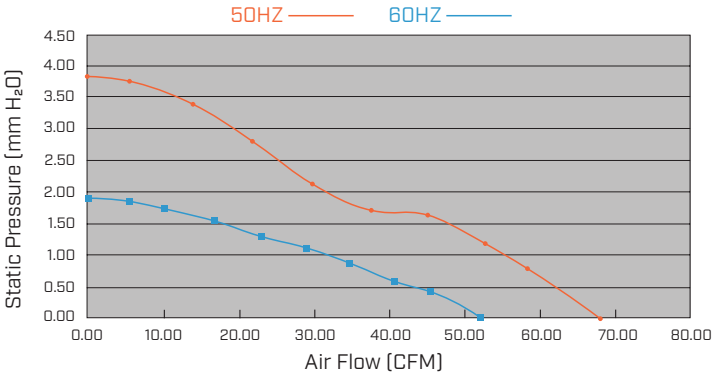

## PERFORMANCE CURVES (CONTINUED)

### CAF-A238B-124-370

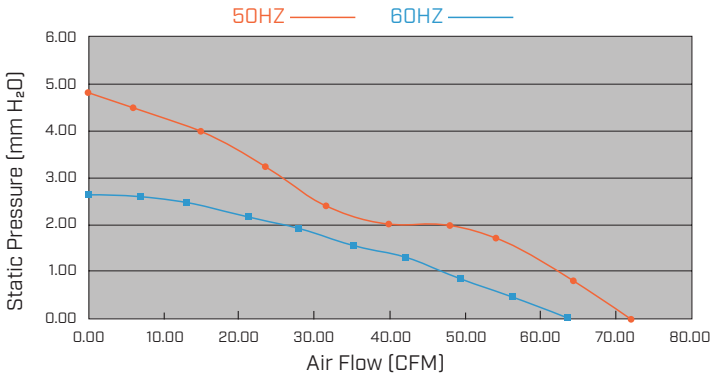


### CAF-A238B-126-400

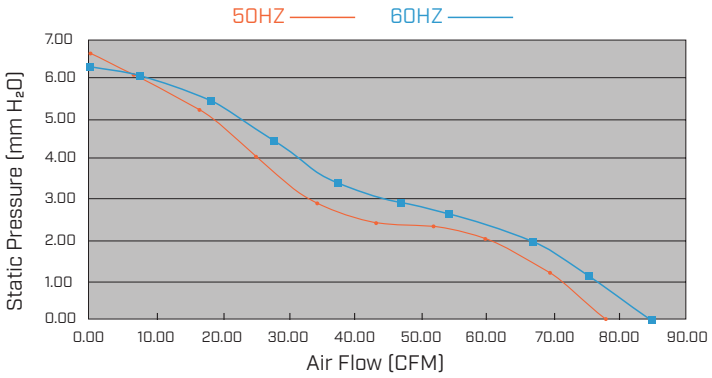


### CAF-A238B-220-300

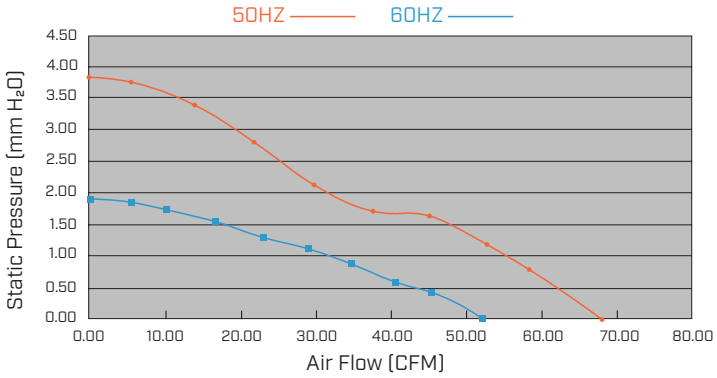


### CAF-A238B-224-370

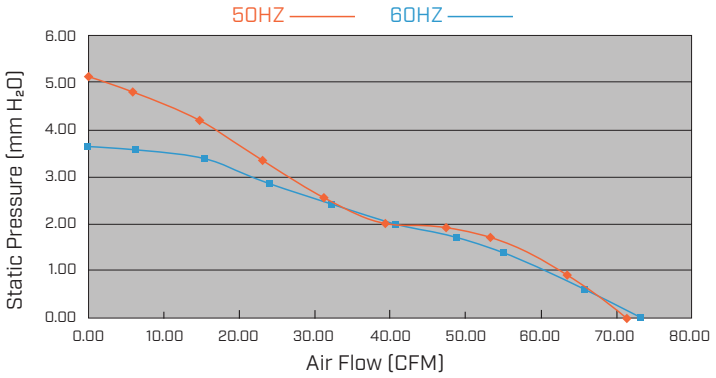


### CAF-A238B-226-400

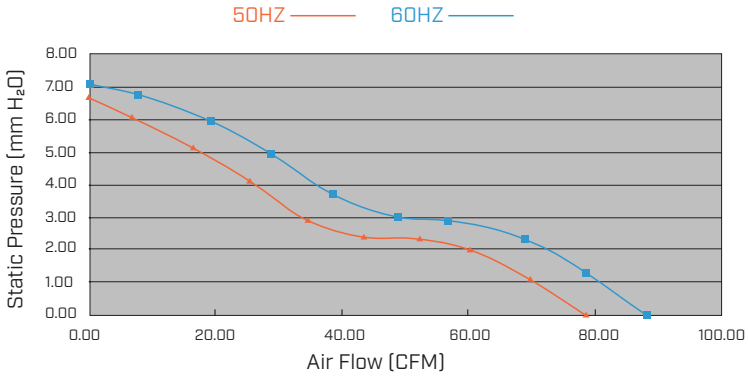

## MECHANICAL

| parameter | conditions/description | min | typ | max | units |
|---|---|---|---|---|---|
| motor | AC brushless | | | | |
| bearing system | dual ball bearing | | | | |
| direction of rotation | counter-clockwise viewed from front of fan blade | | | | |
| dimensions | CAF-A225B models: 119.6 x 119.6 x 26.0<br>CAF-A238B models: 119.5 x 119.5 x 38.5 | | | | mm<br>mm |
| material | fan frame: aluminum<br>fan impellar: PBT (UL94V-0) | | | | |
| weight | CAF-A225B models: weight varies by model<br>CAF-A238B models: weight varies by model | 285<br>460 | | 287<br>475 | g<br>g |

## MECHANICAL DRAWING

units: mm

wires: UL 1007, 22 AWG

| MOUNTING SCREW (Pan Head) | | | |
|---|---|---|---|
| Screw Type | Mounting Hole | Screw Size | Torque |
| Machine Screw | M4X0.7 | M4X0.7 | 1.5 N-m |
| Machine Screw | M5X0.8 | M5X0.8 | 2.0 N-m |

### CAF-A225B

| WIRE CONNECTIONS | |
|---|---|
| Wire Color | Function |
| Black | +Vin |
| Black | -Vin |

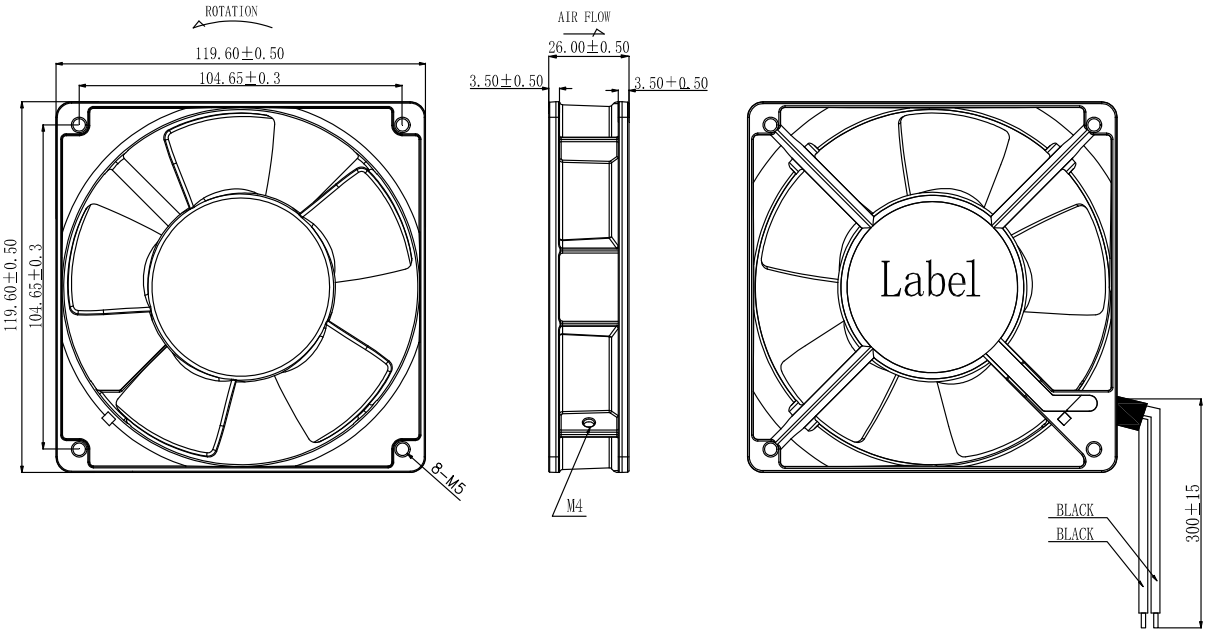

## MECHANICAL DRAWING (CONTINUED)

units: mm

wires: UL 1007, 22 AWG

| MOUNTING SCREW (Pan Head) | | | |
|---|---|---|---|
| Screw Type | Mounting Hole | Screw Size | Torque |
| Machine Screw | M4X0.7 | M4X0.7 | 1.5 N-m |
| Machine Screw | M5X0.8 | M5X0.8 | 2.0 N-m |

### CAF-A238B

| WIRE CONNECTIONS | |
|---|---|
| Wire Color | Function |
| Black | +Vin |
| Black | -Vin |

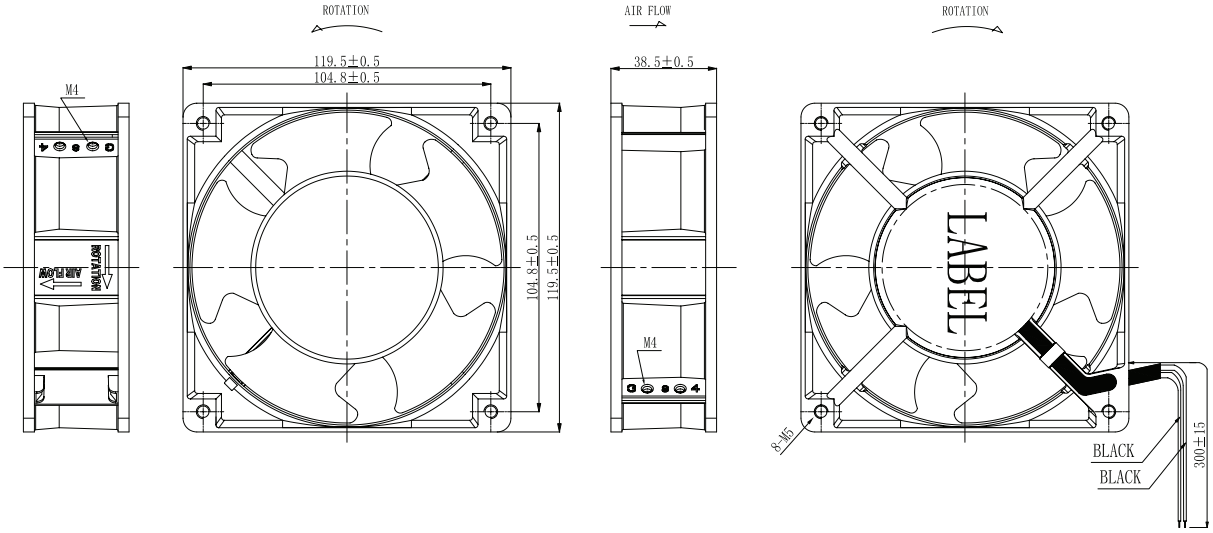

## REVISION HISTORY

| rev. | description | date |
|---|---|---|
| 1.0 | initial release | 10/17/2023 |
| 1.01 | adjusted frame size of CAF-A225B models | 05/06/2024 |
| 1.02 | CUI Devices rebranded to Same Sky | 09/12/2024 |
| 1.03 | updated datasheet | 11/13/2025 |

The revision history provided is for informational purposes only and is believed to be accurate.

Same Sky offers a one (1) year limited warranty. Complete warranty information is listed on our website.

Same Sky reserves the right to make changes to the product at any time without notice. Information provided by Same Sky is believed to be accurate and reliable. However, no responsibility is assumed by Same Sky for its use, nor for any infringements of patents or other rights of third parties which may result from its use.

Same Sky products are not authorized or warranted for use as critical components in equipment that requires an extremely high level of reliability. A critical component is any component of a life support device or system whose failure to perform can be reasonably expected to cause the failure of the life support device or system, or to affect its safety or effectiveness.