MSI1769 series



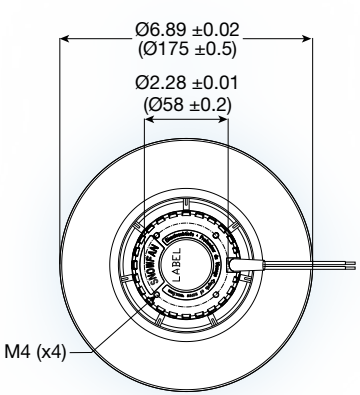

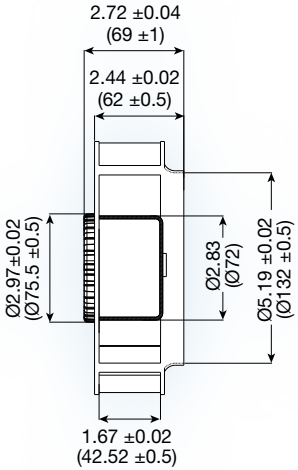

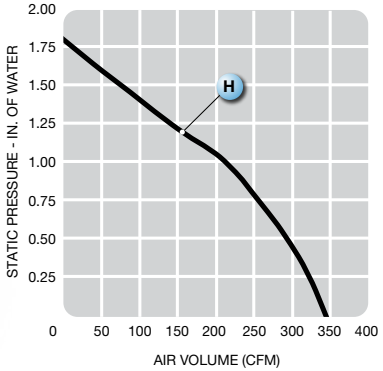

(175 dia. x 69 mm)

6.89 dia. x 2.72 inches

Features:	soft start, reverse polarity protection, auto-restart
Operating Voltage:	24 or 48 VDC
Construction:	aluminum die cast motor base; UL94V-0 plastic impeller
Bearing option:	ball bearing
Motor:	brushless DC

Model No.	Rated Voltage	Current A		Speed	Air Volume		Max. Static Pressure (H_2O)		Sound Noise	Weight
	VDC	24	48	RPM	M^3/Min.	CFM	MM	INCH	dbA	g
MSI1769H	24/48	4.60	2.30	3,500	9.8	345	45.7	1.80	72	1300